Palm grip
B6

The palm grip B6 has different equipment options for many requirements.
It is compatible with our multi-axis controller or mounted on hydraulic drives.
The palm grip has a highly flexible cable (4 respectively 8x0,25qmm, 450mm long).
The mounting piece can be supplied with a tapped hole M10 (standard) or M8.

Technical data

Operating temperature	-40°C til +60°C
Degree of protection	IP54
Contact complement	1,5A 24V DC13

2

Example

	B6	- 2D	K	- X
Basic unit				
B6 Palm grip				
Digital actuating element				
D Push button top				
W Rocker switch top T-0-T				
W Rocker switch top R-0-T				
W Rocker switch top R-0-R				
K* Lever switch				
** Included with the delivery of palm grip B6!*				
Special model				
X Special / customer-specific				

KIMATIC.es
tel. 94 620 10 36 fáx. 94 620 18 32
info@kimatic.es · www.kimatic.es

Technical details may vary based on configuration or application! Technical data subject to change without notice!

B6

Edition:
Lever switch side
Rocker switch installed top

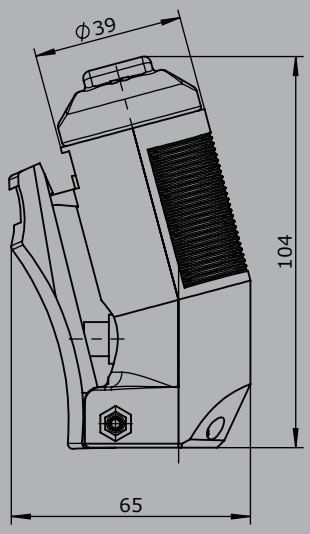

Edition:
Lever switch side
Push button top

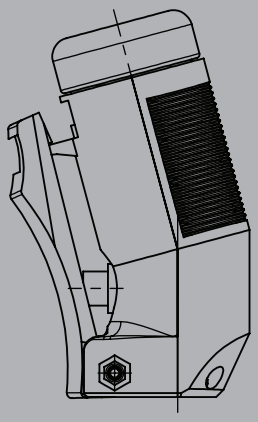

KIMATIC.es
tel. 94 620 10 36 fáx. 94 620 18 32
info@kimatic.es · www.kimatic.es

Technical details may vary based on configuration or application! Technical data subject to change without notice!