Driver seat
KFS 8

GESSMANN Industrial Controllers

The crane driver`s seat KFS 8 is a static seat with ergonomically designed and provides a high grade of comfort.
The driver`s seat is equipped with roller-bearing swivel system.
All adjustment controls are positioned ergonomically within easy access.
The metal parts are protected against corrosion and painted black.

Technical data:

Horizontal adjustment	150mm
Inclination of the backrest	max. 28°
Height adjustment	65mm

Example

	KFS 82	- A1	- S1	- U
Driver seat				
KFS 82 Driver seat with textil cover grey / black				
Attachments				
K Headrest				
A1 Armrest fully adjustable (2 pieces) 50mm wide				
A2 Armrest fully adjustable (2 pieces) 100mm wide				
S1 Safety belt 2-point mounting (automatic)				
S3 Safety belt 2-point mounting (static)				
U Base frame (Apron)				

3

KIMATIC.es
tel. 94 620 10 36 fáx. 94 620 18 32
info@kimatic.es · www.kimatic.es

Technical details may vary based on configuration or application! Technical data subject to change without notice!

GESSMANN
Industrial Controllers

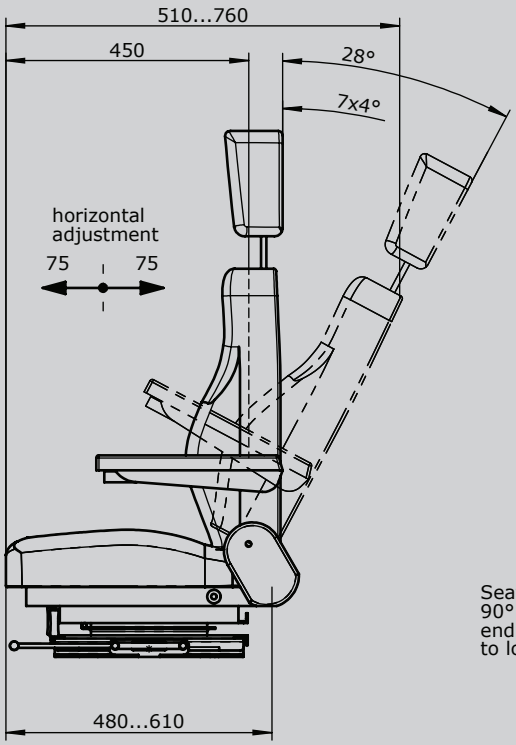

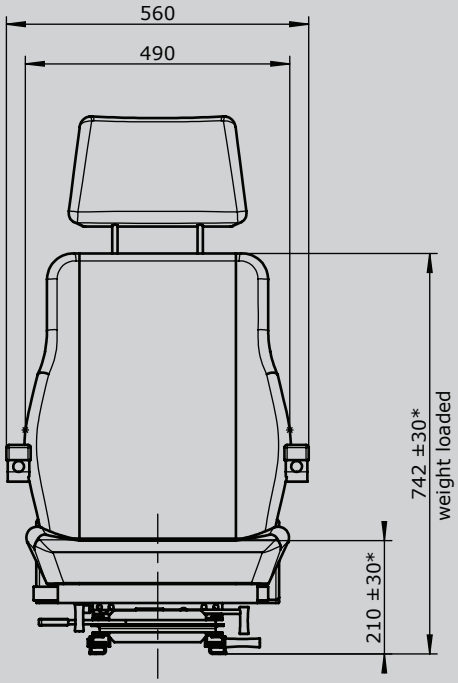

Mounting dimensions
of the seat rails

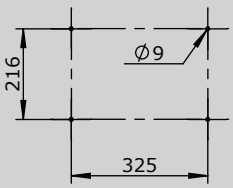

* adjustable

KIMATIC.es
tel. 94 620 10 36 fáx. 94 620 18 32
info@kimatic.es · www.kimatic.es

Technical details may vary based on configuration or application! Technical data subject to change without notice!