Crane control unit
KST 10 swiveling

GESSMANN Industrial Controllers

The KST 10 is an ergonomically designed swiveling crane control chair which provides a high degree of comfort.

Equipment boxes:
The sheet steel equipment boxes are vertically and horizontally adjusted. The arrangement of the joysticks, indicators and control devices is customised according to customer specifications.
Cabling is run through aduct in the cross-member. (Terminal block)
Special boxes available upon request.

Driver seat:
As standard the KST 10 is fitted with a KFS 11 seat. The seat itself is fitted with a hydraulic vibration absorption system complete with weight adjustment to ensure that the comfort level is fitted with armrests and a headrest. There is the option to have the seat covered with air-permeable artificial leather.

Cross-member with swivel base:
The cover of the sheet steel cross-member including the driver's seat is forward foldable.
Thereby all wirings, terminals and bushings are easily accessible during commissioning and maintenance.
Swivel base has zero-clearance bearing and can be locked by a friction brake.

Surface treatment:
Base coat and textured varnish
Standard colour RAL 9011 black

Example

KST 10	- 3	- M1	- F1	- LK	/	KFS 11	/	V85	/	V85.1	/	KL	/	X

Basic unit

KST 10	With equipment boxes

Base unit

1	Swiveling 180° left, 90° right with friction brake
2	Electric swiveling 180° left, 90° right
3	Not swiveling
4	Without base frame

Attachments

M1	Monitor mounting with monitor housing
M2	Monitor mounting with monitor mounting braket
M3	Monitor mounting without monitor housing/-mounting braket
F1	Footrest KBF/433
H	Heater 2x2kW with ventilator
LK	Plate for horizontal manual adjustment of control units +/- 250mm

Driver seat

KFS 11*	*(included in the delivery!)*
KFS 9*	
KFS 10*	
KFS 12*	

**Description see driver seat page 187*

KIMATIC.es
tel. 94 620 10 36 fáx. 94 620 18 32
info@kimatic.es · www.kimatic.es

3

Technical details may vary based on configuration or application! Technical data subject to change without notice!

Crane control unit
KST 10 swiveling

GESSMANN Industrial Controllers

KST 10 - 3 - M1 - F1 - LK / KFS 11 / V64 / V64.1 / KL / X

Mounting for equipment boxes

V...	Multi-axis controller *(see page 1)*
S...	Single-axis controller *(see page 71)*
D...	Double-handle controller *(see page 49)*
N...	Control-switch *(see page 107)*
...	*More command and indicating devices (see page 163)*

Wiring

KL	Without wiring, but terminal block built in each terminal
KLV	On terminal block 4qmm with single wire 1qmm each terminal
KLV	On SPS (SPS provision) with single wire 1qmm each terminal
KLVA	External wiring single wire highly flexible 1,5qmm 5m long each terminal

Special model

X	Special / customer-specific
X[1]	Special painted

Option

Radio remote control system

3

KIMATIC.es
tel. 94 620 10 36 fáx. 94 620 18 32
info@kimatic.es · www.kimatic.es

Technical details may vary based on configuration or application! Technical data subject to change without notice!

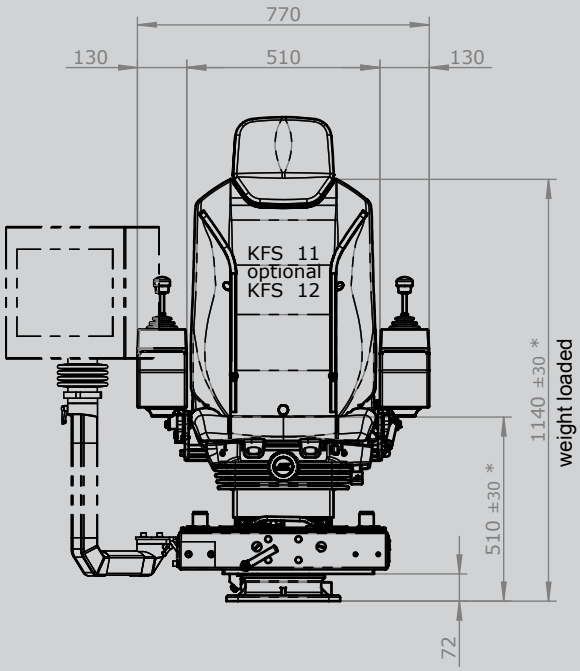

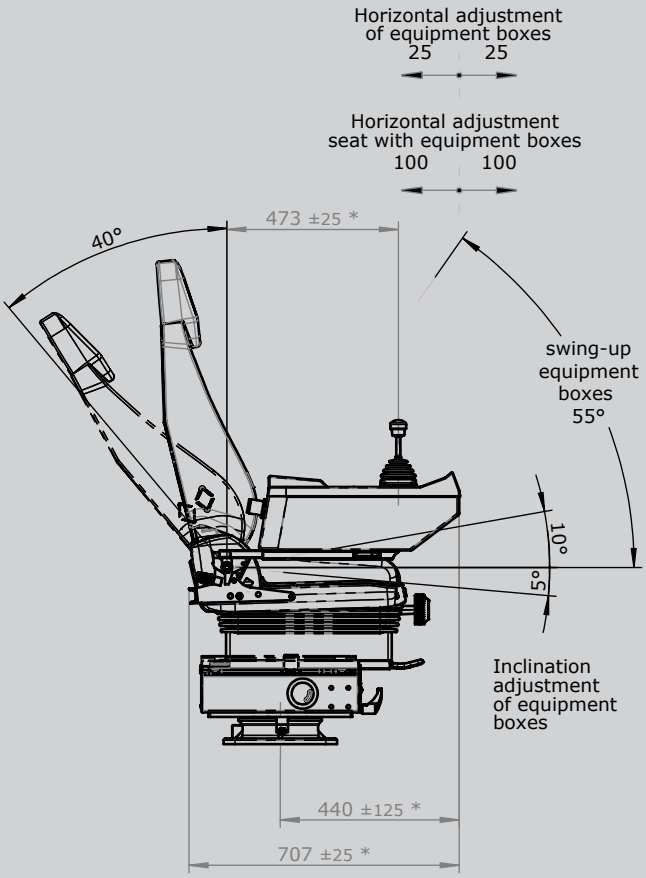

with heating

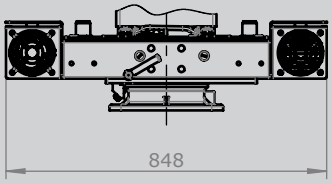

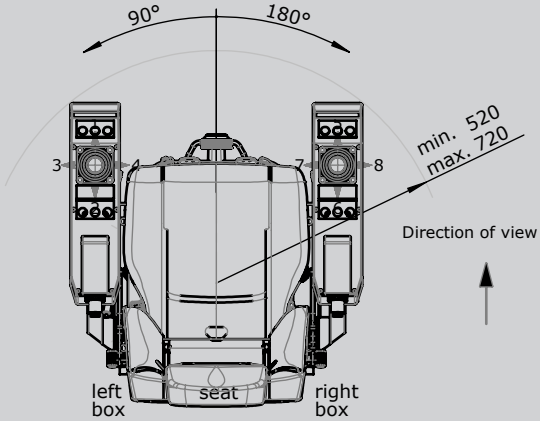

Floor mounting

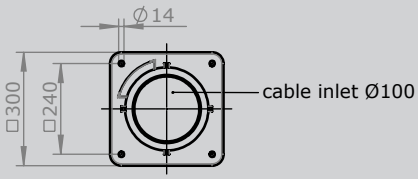

* adjustable

KIMATIC.es
tel. 94 620 10 36 fáx. 94 620 18 32
info@kimatic.es · www.kimatic.es

Technical details may vary based on configuration or application! Technical data subject to change without notice!